Alle Rechte vorbehalten/ *All rights reserved*

RECOMMENDED PANEL CUTOUT DIMENSIONS

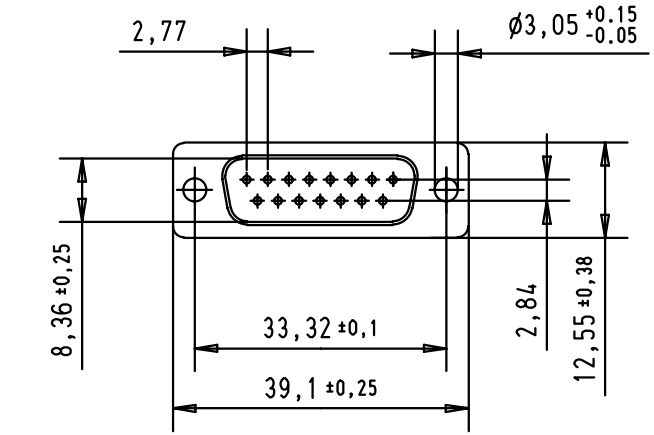

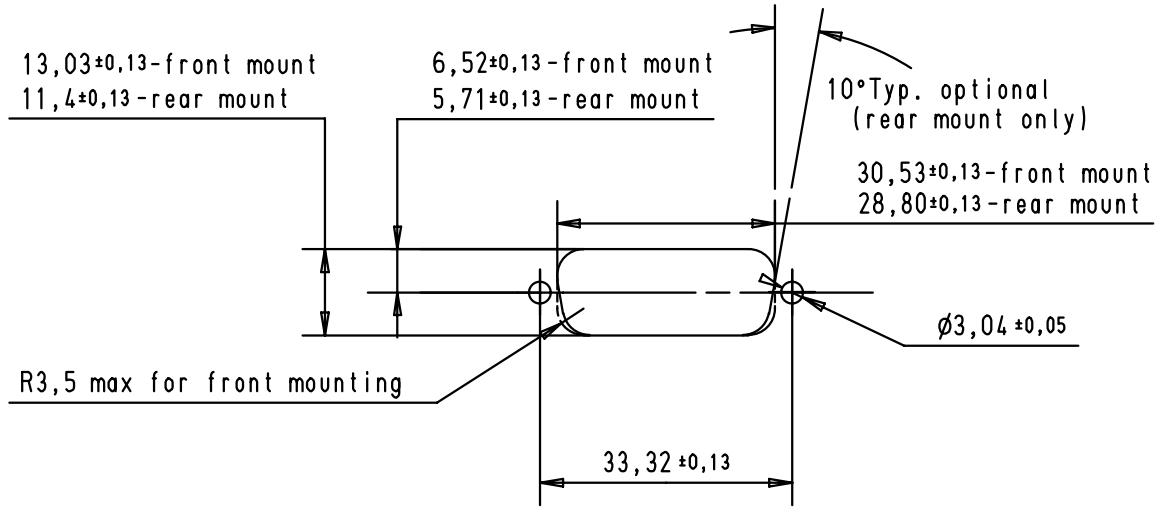

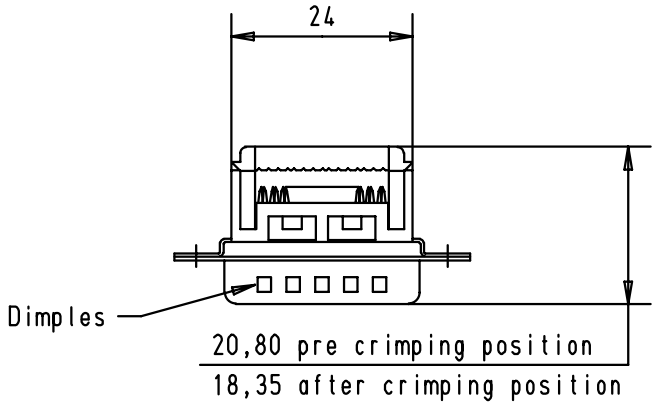

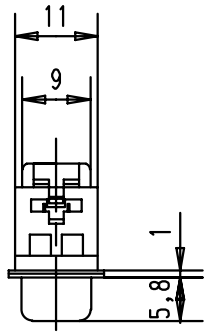

1.27 mm pitch flat cable stranded, wire sizes : AWG 26 to 28

part number	No of contact	performance level
09 66 228 7700	15	3
09 66 228 6700	15	2
09 66 228 5700	15	0.76 µm Au

Mod.	Dat.	Name
29771	16-APR-02	CV
29756	19-MAR-02	CV
29692	03-JUL-01	SH

	Dat.	Name
Detail.	03-JUL-01	SH
Insp.		
Stand.		

All Dim. in mm
Orig. Size DIN A 4

HARTING ELEKTRONIK
F-95972 Paris

D-Sub male connector

Insulation displacement termination through holes fixing

Maßstab/ *Scale* 1 : 1

TB 0966 228 x700

Sub.

Blatt/ *Page* 1