Desk-top cases – CompacPRO

HORIZONTAL RAILS TO FRONT/CENTRE/REAR

ORDER INFORMATION

		For indirect backplane fixing with insulation strip	For direct backplane fixing	For direct fixing of connectors in accordance with EN 60603-2 (DIN 41612)	Front horizontal rails
		04400001	04400002	04400003	
		"heavy" Type H-ST standard	"heavy" Type H-VT long lip	"heavy" Type H-MZ with Z-rail	"heavy" Type H-KD short lip
		06197011	06197013	06197015	06197008
		Al extrusion, anodised finish, conductive contact surface, with printed HP markings	Al extrusion, anodised finish, conductive contact surface, with printed HP markings	Al extrusion, anodised finish, conductive contact surface, with printed HP markings	Al extrusion, anodised finish, conductive contact surface, with printed HP markings
Usable length HP	Length mm	1 piece (SPQ 10)[1]	1 piece (SPQ 10)[1]	1 piece (SPQ 10)[1]	1 piece (SPQ 10)[1]
28	147.32	**34560-528**	**34560-728**	**34560-928**	**34560-228**
42	218.44	**34560-542**	**34560-742**	**34560-942**	**34560-242**
63	325.12	**34560-563**	**34560-763**	**34560-963**	**34560-263**
84	431.80	**34560-584**	**34560-784**	**34560-984**	**34560-284**
Torx countersunk screw, , M4 × 14, St, zinc-plated, PU 100 pieces		**24571-371**	**24571-371**	**24571-371**	**24571-371**
Torx countersunk screw, , M4 × 10, St, zinc-plated, required if guide rail is screwed to slot 1, PU 100 pieces		–	–	**24571-372**	**24571-372**
Z-rail for connector mounting without insulation strip see page		5.91	–	–	–
Insulation strips see page		–	5.90	–	–
Threaded inserts see page		5.90	5.90	5.90	5.90

1) SPQ (standard pack quantity): Order number includes 1 piece, but delivery is exclusively made in standard pack quantity (SPQ); please order at least the SPQ quantity or a multiple thereof

NOTE

- Further horizontal rails, see from page 6.27
- Fitting options, see page 5.88

Part number in bold face type: ready for despatch within 2 working days
Part number in normal type: ready for despatch within 10 working days

Desk-top cases – CompacPRO

HORIZONTAL RAIL, CENTRE, TYPE ST-C

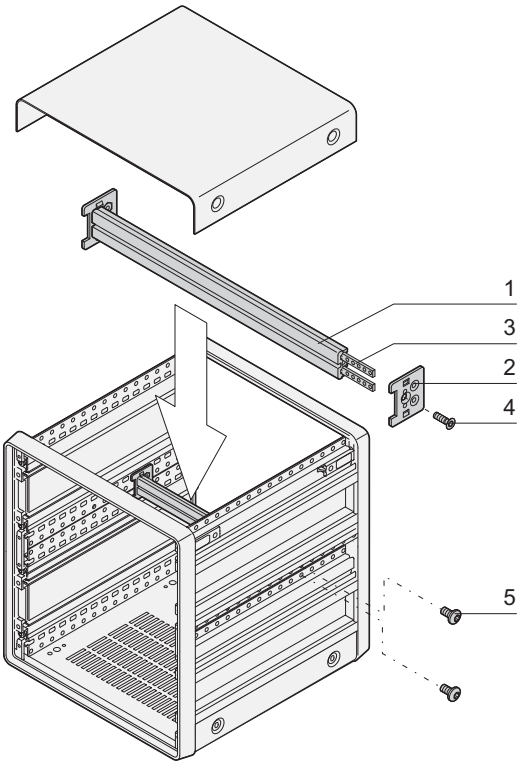

02005050

- For indirect backplane mounting (with insulation strip)
- For 6 U compacPRO case

DELIVERY COMPRISES (Kit, items 1 to 4 are pre-mounted)

Item	Qty	Description
1	1	Horizontal rail, Al extrusion, anodised, contact surfaces conductive
2	2	Adaptor plate, Al
3	2	Threaded insert, M2.5, St, zinc-plated
4	2	Countersunk screw, M4 x 14
5	4	Panhead screw, M4 x 6

ORDER INFORMATION

Usable width HP	Length mm	Part no.
63	325.1	**24575-454**
84	431.8	**24575-474**

THREADED INSERTS, PERFORATED STRIPS, INSULATION STRIPS

ORDER INFORMATION

	Threaded insert M2.5		Threaded insert M3	Insulation strip	
	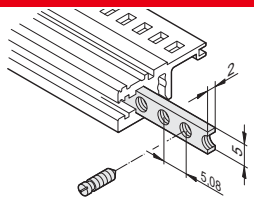 06103056 required for fixing the front panel to the horizontal rail; St, zinc-plated; Use collar screw 12.3 mm, see page 6.64			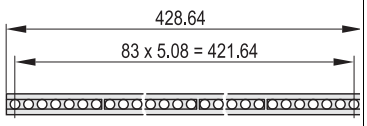 BZ6749 for insulated mounting of backplane; PBT UL 94 V-0, grey	
Usable length HP	Length mm	1 piece (SPQ 10)[1]	1 piece (SPQ 10)[1]	Length mm	PU 10 pieces
28	146.82	**34561-328**	–	144.20	**24560-828**
42	217.94	**34561-342**	–	210.40	**24560-842**
63	324.62	**34561-363**	–	316.88	**24560-863**
84	431.30	**34561-384**	**34561-484**	428.64	**24560-884**
Accessories					
Grub screw M2.5 x 8, PU 100 pieces		**21100-276**	–		–
Grub screw M3 x 8, PU 100 pieces		–	**21100-646**		–

1) SPQ (standard pack quantity): Order number includes 1 piece, but delivery is exclusively made in standard pack quantity (SPQ); please order at least the SPQ quantity or a multiple thereof

2) Part no. includes one packing unit (PU); delivery is exclusively made in PU